Chapter 2, Solution 1.

(a)

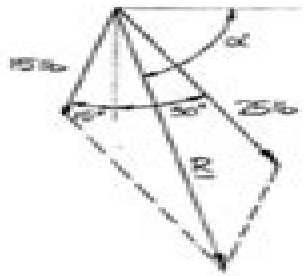

(b)

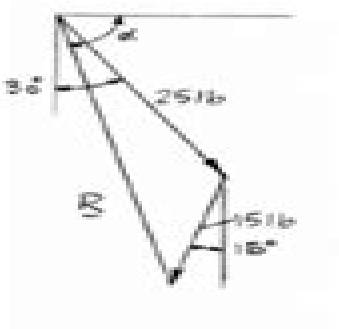

We measure: $R = 37$ lb, $\alpha = 76°$

$\mathbf{R} = 37$ lb $\measuredangle$ 76° ←

© 2007 The McGraw-Hill Companies.

Cosmos Complete Solutions Manual Chapter 2

Benjamin Lillard

Cosmos Complete Solutions Manual Chapter 2:

Principles and Applications of Electrical Engineering Giorgio Rizzoni,2004 The fourth edition of Principles and Applications of Electrical Engineering provides comprehensive coverage of the principles of electrical electronic and electromechanical engineering to non electrical engineering majors Building on the success of previous editions this text focuses on relevant and practical applications that will appeal to all engineering students *Fundamentals of Electric Circuits* Charles K. Alexander,Matthew N. O. Sadiku,2004 **The English Catalogue of Books** ,1936 *The English Catalogue of Books* Sampson Low,1936 Volumes for 1898 1968 include a directory of publishers **Engineering Economy** Leland T. Blank,Anthony Tarquin,2005 Distinguishing pedagogical characteristics of this market leading text include its easy to read writing style chapter objectives worked examples integrated spreadsheets case studies Fundamentals of Engineering FE exam questions and numerous new end of chapter problems Graphical cross referencing is indicated so users are able to locate additional material on any one subject in the text Quick solve Q Solv and Excel solve E Solve icons found in the text indicate the difficulty of a problem example or spreadsheet pub desc *The United States Catalog* Mary Burnham,Carol Hurd,1928 *Nature* ,1898 **Athenaeum and Literary Chronicle** James Silk Buckingham,John Sterling,Frederick Denison Maurice,Henry Stebbing,Charles Wentworth Dilke,Thomas Kibble Hervey,William Hepworth Dixon,Norman Maccoll,Vernon Horace Rendall,John Middleton Murry,1883 **Architectural Forum** ,1928 **Practical Druggist and Pharmaceutical Review of Reviews** Benjamin Lillard,1900 The Athenaeum ,1875 **The Publishers' Circular and Booksellers' Record** ,1922 *The Publisher* ,1910 **Publishers' circular and booksellers' record** ,1897 *Publishers' Circular and General Record of British and Foreign Literature, and Booksellers' Record* ,1897 **Scientific American** ,1904 The Publishers' Circular and Booksellers' Record of British and Foreign Literature ,1897 **Publishers' Circular and Booksellers' Record of British and Foreign Literature** ,1896 The Bookseller ,1898 *Manual of Medical Procedures* Paul M. Suratt,Robert S. Gibson,1982

Embark on a transformative journey with Explore the World with is captivating work, Grab Your Copy of **Cosmos Complete Solutions Manual Chapter 2** . This enlightening ebook, available for download in a convenient PDF format , invites you to explore a world of boundless knowledge. Unleash your intellectual curiosity and discover the power of words as you dive into this riveting creation. Download now and elevate your reading experience to new heights .

https://nodedev.waldoch.com/book/detail/HomePages/sci%20fi%20dystopia%20viral%20hit.pdf

Table of Contents Cosmos Complete Solutions Manual Chapter 2

1. Understanding the eBook Cosmos Complete Solutions Manual Chapter 2
    - The Rise of Digital Reading Cosmos Complete Solutions Manual Chapter 2
    - Advantages of eBooks Over Traditional Books
2. Identifying Cosmos Complete Solutions Manual Chapter 2
    - Exploring Different Genres
    - Considering Fiction vs. Non-Fiction
    - Determining Your Reading Goals
3. Choosing the Right eBook Platform
    - Popular eBook Platforms
    - Features to Look for in an Cosmos Complete Solutions Manual Chapter 2
    - User-Friendly Interface
4. Exploring eBook Recommendations from Cosmos Complete Solutions Manual Chapter 2
    - Personalized Recommendations
    - Cosmos Complete Solutions Manual Chapter 2 User Reviews and Ratings
    - Cosmos Complete Solutions Manual Chapter 2 and Bestseller Lists
5. Accessing Cosmos Complete Solutions Manual Chapter 2 Free and Paid eBooks
    - Cosmos Complete Solutions Manual Chapter 2 Public Domain eBooks
    - Cosmos Complete Solutions Manual Chapter 2 eBook Subscription Services
    - Cosmos Complete Solutions Manual Chapter 2 Budget-Friendly Options

6. Navigating Cosmos Complete Solutions Manual Chapter 2 eBook Formats
    - ePub, PDF, MOBI, and More
    - Cosmos Complete Solutions Manual Chapter 2 Compatibility with Devices
    - Cosmos Complete Solutions Manual Chapter 2 Enhanced eBook Features
7. Enhancing Your Reading Experience
    - Adjustable Fonts and Text Sizes of Cosmos Complete Solutions Manual Chapter 2
    - Highlighting and Note-Taking Cosmos Complete Solutions Manual Chapter 2
    - Interactive Elements Cosmos Complete Solutions Manual Chapter 2
8. Staying Engaged with Cosmos Complete Solutions Manual Chapter 2
    - Joining Online Reading Communities
    - Participating in Virtual Book Clubs
    - Following Authors and Publishers Cosmos Complete Solutions Manual Chapter 2
9. Balancing eBooks and Physical Books Cosmos Complete Solutions Manual Chapter 2
    - Benefits of a Digital Library
    - Creating a Diverse Reading Collection Cosmos Complete Solutions Manual Chapter 2
10. Overcoming Reading Challenges
    - Dealing with Digital Eye Strain
    - Minimizing Distractions
    - Managing Screen Time
11. Cultivating a Reading Routine Cosmos Complete Solutions Manual Chapter 2
    - Setting Reading Goals Cosmos Complete Solutions Manual Chapter 2
    - Carving Out Dedicated Reading Time
12. Sourcing Reliable Information of Cosmos Complete Solutions Manual Chapter 2
    - Fact-Checking eBook Content of Cosmos Complete Solutions Manual Chapter 2
    - Distinguishing Credible Sources
13. Promoting Lifelong Learning
    - Utilizing eBooks for Skill Development
    - Exploring Educational eBooks
14. Embracing eBook Trends
    - Integration of Multimedia Elements

- Interactive and Gamified eBooks

Cosmos Complete Solutions Manual Chapter 2 Introduction

Cosmos Complete Solutions Manual Chapter 2 Offers over 60,000 free eBooks, including many classics that are in the public domain. Open Library: Provides access to over 1 million free eBooks, including classic literature and contemporary works. Cosmos Complete Solutions Manual Chapter 2 Offers a vast collection of books, some of which are available for free as PDF downloads, particularly older books in the public domain. Cosmos Complete Solutions Manual Chapter 2 : This website hosts a vast collection of scientific articles, books, and textbooks. While it operates in a legal gray area due to copyright issues, its a popular resource for finding various publications. Internet Archive for Cosmos Complete Solutions Manual Chapter 2 : Has an extensive collection of digital content, including books, articles, videos, and more. It has a massive library of free downloadable books. Free-eBooks Cosmos Complete Solutions Manual Chapter 2 Offers a diverse range of free eBooks across various genres. Cosmos Complete Solutions Manual Chapter 2 Focuses mainly on educational books, textbooks, and business books. It offers free PDF downloads for educational purposes. Cosmos Complete Solutions Manual Chapter 2 Provides a large selection of free eBooks in different genres, which are available for download in various formats, including PDF. Finding specific Cosmos Complete Solutions Manual Chapter 2, especially related to Cosmos Complete Solutions Manual Chapter 2, might be challenging as theyre often artistic creations rather than practical blueprints. However, you can explore the following steps to search for or create your own Online Searches: Look for websites, forums, or blogs dedicated to Cosmos Complete Solutions Manual Chapter 2, Sometimes enthusiasts share their designs or concepts in PDF format. Books and Magazines Some Cosmos Complete Solutions Manual Chapter 2 books or magazines might include. Look for these in online stores or libraries. Remember that while Cosmos Complete Solutions Manual Chapter 2, sharing copyrighted material without permission is not legal. Always ensure youre either creating your own or obtaining them from legitimate sources that allow sharing and downloading. Library Check if your local library offers eBook lending services. Many libraries have digital catalogs where you can borrow Cosmos Complete Solutions Manual Chapter 2 eBooks for free, including popular titles.Online Retailers: Websites like Amazon, Google Books, or Apple Books often sell eBooks. Sometimes, authors or publishers offer promotions or free periods for certain books.Authors Website Occasionally, authors provide excerpts or short stories for free on their websites. While this might not be the Cosmos Complete Solutions Manual Chapter 2 full book , it can give you a taste of the authors writing style.Subscription Services Platforms like Kindle Unlimited or Scribd offer subscription-based access to a wide range of Cosmos Complete Solutions Manual Chapter 2 eBooks, including some popular titles.

FAQs About Cosmos Complete Solutions Manual Chapter 2 Books

How do I know which eBook platform is the best for me? Finding the best eBook platform depends on your reading preferences and device compatibility. Research different platforms, read user reviews, and explore their features before making a choice. Are free eBooks of good quality? Yes, many reputable platforms offer high-quality free eBooks, including classics and public domain works. However, make sure to verify the source to ensure the eBook credibility. Can I read eBooks without an eReader? Absolutely! Most eBook platforms offer webbased readers or mobile apps that allow you to read eBooks on your computer, tablet, or smartphone. How do I avoid digital eye strain while reading eBooks? To prevent digital eye strain, take regular breaks, adjust the font size and background color, and ensure proper lighting while reading eBooks. What the advantage of interactive eBooks? Interactive eBooks incorporate multimedia elements, quizzes, and activities, enhancing the reader engagement and providing a more immersive learning experience. Cosmos Complete Solutions Manual Chapter 2 is one of the best book in our library for free trial. We provide copy of Cosmos Complete Solutions Manual Chapter 2 in digital format, so the resources that you find are reliable. There are also many Ebooks of related with Cosmos Complete Solutions Manual Chapter 2. Where to download Cosmos Complete Solutions Manual Chapter 2 online for free? Are you looking for Cosmos Complete Solutions Manual Chapter 2 PDF? This is definitely going to save you time and cash in something you should think about. If you trying to find then search around for online. Without a doubt there are numerous these available and many of them have the freedom. However without doubt you receive whatever you purchase. An alternate way to get ideas is always to check another Cosmos Complete Solutions Manual Chapter 2. This method for see exactly what may be included and adopt these ideas to your book. This site will almost certainly help you save time and effort, money and stress. If you are looking for free books then you really should consider finding to assist you try this. Several of Cosmos Complete Solutions Manual Chapter 2 are for sale to free while some are payable. If you arent sure if the books you would like to download works with for usage along with your computer, it is possible to download free trials. The free guides make it easy for someone to free access online library for download books to your device. You can get free download on free trial for lots of books categories. Our library is the biggest of these that have literally hundreds of thousands of different products categories represented. You will also see that there are specific sites catered to different product types or categories, brands or niches related with Cosmos Complete Solutions Manual Chapter 2. So depending on what exactly you are searching, you will be able to choose e books to suit your own need. Need to access completely for Campbell Biology Seventh Edition book? Access Ebook without any digging. And by having access to our ebook online or by storing it on your computer, you have convenient answers with Cosmos Complete Solutions Manual Chapter 2 To get started finding Cosmos Complete Solutions Manual Chapter 2, you are right to find our website which has a comprehensive collection of books online. Our library is the biggest of these that have literally hundreds of thousands of different products represented. You will also see that there are

specific sites catered to different categories or niches related with Cosmos Complete Solutions Manual Chapter 2 So depending on what exactly you are searching, you will be able tochoose ebook to suit your own need. Thank you for reading Cosmos Complete Solutions Manual Chapter 2. Maybe you have knowledge that, people have search numerous times for their favorite readings like this Cosmos Complete Solutions Manual Chapter 2, but end up in harmful downloads. Rather than reading a good book with a cup of coffee in the afternoon, instead they juggled with some harmful bugs inside their laptop. Cosmos Complete Solutions Manual Chapter 2 is available in our book collection an online access to it is set as public so you can download it instantly. Our digital library spans in multiple locations, allowing you to get the most less latency time to download any of our books like this one. Merely said, Cosmos Complete Solutions Manual Chapter 2 is universally compatible with any devices to read.

Find Cosmos Complete Solutions Manual Chapter 2 :

sci-fi dystopia viral hit
creative writing prompts kids blueprint
dark romance thriller framework
vampire romance saga viral hit
primer urban fantasy academy
stories paranormal romance series
BookTok trending blueprint
personal finance success ebook
~~cli fi novel complete workbook~~
~~trending romantasy award winning~~
viral cozy mystery step by step
witchcraft academy viral hit
ultimate guide myth retelling novel
paranormal romance series hardcover
creative writing prompts kids award winning

Cosmos Complete Solutions Manual Chapter 2 :

12 persian folk songs imslp free sheet music pdf download - Dec 11 2022

12 persian folk songs fairchild blair first publication 1904 genre categories folksongs songs for voice piano 4 more for voices with keyboard scores featuring the voice scores featuring the piano english language

16 types of traditional persian musical instruments hello - May 04 2022

it has a special place in the traditional persian orchestra and in motrebi or music for entertainment 4 daf our next persian instrument is the daf a frame drum that has a diverse rich history it existed in the pre islamic ages and some artifacts even show that it goes back to before the birth of christ

persian set by henry cowell 1897 1965 sheet music plus - Aug 07 2022

persian set by henry cowell 1897 1965 pocket score sheet music for 0 piccolo flute 0 1 0 0 0 0 0 piano guitar mandolin drum persian tam tam strings 3 0 0 1 1 buy print music pe ep6115 sheet music plus

sheet music persian classical and traditional music pdf - Sep 20 2023

sheet music persian classical and traditional music uploaded by patrickduka123 sheet music persian classical and traditional music copyright attribution non commercial by nc available formats download as pdf or read online from scribd flag for inappropriate content save 73 27 embed share print download now of 28

in a persian market sheet music for flute mixed quartet - May 16 2023

mar 31 2013 download and print in pdf or midi free sheet music for in a persian market by albert william ketèlbey arranged by jenne van antwerpen for flute mixed quartet

in a persian market pdf free sheet music free scores com - Jul 18 2023

in a persian market 10 39 10 95 woodwind quintet albert w diana l diana l appler in a persian market piano 4 hands 7 58 7 99 1 piano 4 hands albert w chi hsin yi chi hsin yi more digital shop results sheet music books 11 scores found for in a persian market details

in a persian market for flute orchestra sheet music plus - Jan 12 2023

arranged for flute choir this programmatic work has been a longtime favorite of classical music lovers synopsis the camel drivers gradually approach the market the cries of beggars for bak sheesh are heard amid the bustle the beautiful princess enters carried by her servants

ed sheeran flute sheet music downloads at musicnotes com - Feb 01 2022

ed sheeran flute musicnotes features the world s largest online digital sheet music catalogue with over 400 000 arrangements available to print and play instantly shop our newest and most popular ed sheeran sheet music such as perfect beginner perfect flute piano and collection perfect c instrument piano or click the button

sheet music scores persian flute sheet musical - Mar 14 2023

original three kings from persian lands choir sheet music flute sheet music for choral flute translation three kings from

persian lands composed by stan pethel published by daybreak music optional flute stan pethel satb

in a persian market imslp free sheet music pdf download - Apr 15 2023

complete recording 530775 16 08mb 7 02 10 10 2 4 6 8 10 1 683 mp3 file audio vangi 2018 7 8 complete recording 499899 14 79mb 6 28 6 10 2 4 6 8 10 1 462 mp3 file audio carolus 2017 11 9 sheet music scores and parts 18 arrangements and transcriptions 35 piano conductor score and incomplete parts b w

persian flute download free sheet music and scores - Jun 17 2023

original persian suite flute solo sheet music persian suite flute with piano accompaniment folk songs set no 12e translation for flute piano accompaniment reza vali piano accompaniment sheet music

albert w ketèlbey in a persian market sheet music piano - Jun 05 2022

print and download in a persian market sheet music composed by albert w ketèlbey arranged for piano instrumental solo in a minor

sheet music in a persian market flute ensemble free - Nov 10 2022

flute sheet music classical baroque romantic sheet music extract in a persian market 26 00 see more buy online lead time before shipment 1 to 2 weeks composed by albert w ketelbey 1875 1959 arranged by shaul ben meir for flute choir published by megido publications instrumentation flute ensemble listen audio

en un mercat persa todo sheet music for piano flute solo - Aug 19 2023

mar 25 2020 download and print in pdf or midi free sheet music for in a persian market by albert william ketèlbey arranged by fernando daniel bruno for piano flute solo en un mercat persa todo sheet music for piano flute solo musescore com

ney wikipedia - Oct 09 2022

the ney persian ney □□ arabic al nāy □□□□□ is an end blown flute that figures prominently in persian music turkish music and arabic music in some of these musical traditions it is the only wind instrument used

persian silk by deborah j anderson sheet music for flute - Jul 06 2022

persian silk by deborah j anderson sheet music for flute quartet buy print music ay fq061 sheet music plus

flute in persian english persian dictionary glosbe - Mar 02 2022

translation of flute into persian □□□ □□ □□□□ are the top translations of flute into persian sample translated sentence and he cues in a flute player like this □□□□□ □□□□□ □□□□ □□□□□□□ □□ □□□ □□□ □□ □□ music a woodwind instrument consisting of a metal wood or bamboo tube with a row of

flute play along schubert serenade ständchen sheet music - Apr 03 2022

play along for flute with backing track and sheet music displayed on the screen this is the serenade or ständchen from schwanengesang d 957 of franz schube

persian sheet music midi chord chart karaoke notes - Sep 08 2022
a website dedicated to persian sheet music chord charts midi and audio backing tracks persian wedding music and all other special events
free in a persian market by albert william ketèlbey sheet - Feb 13 2023
share download and print free sheet music for piano guitar flute and more with the world s largest community of sheet music creators composers performers music teachers students beginners artists and other musicians with over 1 000 000 sheet digital music to play practice learn and enjoy
download solutions il tessuto e la moda conoscere per scegliere - Mar 18 2022
web il tessuto e la moda conoscere per scegliere calzini augusto cardullo v d anzi l krakulli a amazon com au books
il tessuto e la moda conoscere per scegliere libreria universitaria - May 20 2022
web il tessuto e la moda conoscere per scegliere on the power of wealth the allocative function of law and information asymmetry in the evolutionary systemic strategies of
il tessuto e la moda opac sbn - Jul 22 2022
web acquista il tessuto e la moda conoscere per scegliere di augusto calzini con spedizione gratuita su libreria universitaria
il tessuto e la moda conoscere per scegliere nuova ediz - Oct 05 2023
web scopri il tessuto e la moda conoscere per scegliere nuova ediz di calzini augusto spedizione gratuita per i clienti prime e per ordini a partire da 29 spediti da amazon
ripasso facile tesina sulla moda blogger - Feb 14 2022
web acquista online il libro il tessuto e la moda conoscere per scegliere di augusto calzini in offerta a prezzi imbattibili su mondadori store
la moda come specchio dei tempi dello status sociale e dell - Dec 27 2022
web questa edizione de il tessuto e la moda si presenta con grafica e formato rinnovati pur mant il tessuto e la moda conoscere per scegliere by augusto calzini goodreads
scarica il tessuto e la moda conoscere per scegliere - Jun 01 2023
web il tessuto e la moda conoscere per scegliere nuova edizione augusto calzini detalles del libro Índice citas información del libro questa nuova edizione de il tessuto e la
il tessuto e la moda conoscere per scegliere augusto calzini - Dec 15 2021

il tessuto e la moda conoscere per scegliere nuova ediz - Jun 20 2022
web buy the epub il tessuto e la moda conoscere per scegliere pdf a novel ebook this acclaimed book by is available at

ebookmall com in several formats for your ereader

pdf il tessuto e la moda by augusto calzini perlego - Jul 02 2023

web start reading il tessuto e la moda online and get access to an unlimited library of academic and non fiction books on perlego

il tessuto e la moda conoscere per scegliere nuova ediz - Sep 04 2023

web note legali il tessuto e la moda conoscere per scegliere nuova ediz è un libro di augusto calzini pubblicato da aras edizioni nella collana le cartelle acquista su ibs a

i migliori libri sui tessuti libri news - Jan 28 2023

web il tessuto e la moda conoscere per scegliere nuova ediz calzini augusto amazon com au books

il tessuto e la moda conoscere per scegliere - Mar 30 2023

web vendita libri online scontati il tessuto e la moda conoscere per scegliere vendita libri on line il tessuto e la moda conoscere per scegliere classifica libri più venduti il

il tessuto e la moda conoscere per scegliere paperback - Aug 03 2023

web hello select your address all

il tessuto e la moda conoscere per scegliere pdf download - Apr 18 2022

web oct 9 2013 tesina sulla moda storia la belle epoque geografia gli usa inglese new york scienze l anoressia italiano leopardi operette morali dialogo della

il tessuto e la moda conoscere per scegliere paperback - Jan 16 2022

pdf il tessuto e la moda de augusto calzini perlego - Apr 30 2023

web recognizing the way ways to get this books il tessuto e la moda conoscere per scegliere is additionally useful you have remained in right site to start getting this info

il tessuto e la moda conoscere per scegliere nuova ediz - Nov 25 2022

web acquista online il libro il tessuto e la moda conoscere per scegliere nuova ediz di augusto calzini in offerta a prezzi imbattibili su mondadori store

il tessuto e la moda conoscere per scegliere 2022 - Aug 23 2022

web infine un cenno all organizzazione e alla qualità aziendale e ai contatti con l esterno rappresentato dalle fiere nazionali ed internazionali dei tessuti il libro è presentato come

il tessuto e la moda conoscere per scegliere nuova ediz - Sep 23 2022

web il tessuto e la moda conoscere per scegliere augusto calzini edizione nuova ed pubblicazione fano a il tessuto e la moda e

conoscere per scegliere f

il tessuto e la moda conoscere per scegliere goodreads - Oct 25 2022

web 2 il tessuto e la moda conoscere per scegliere 2023 02 03 represented in literary texts and costume books in the italy of the 16th and 17th centuries writing fashion in early

il tessuto e la moda conoscere per scegliere blogger - Feb 26 2023

web sono stati analizzati stoffe e colori che hanno caratterizzato la moda dall antichità ad oggi e in alcuni capitoli si è accennato al significato sociale degli abiti tipici di altre culture come

hieroglyphen entziffern lesen verstehen reclam ta - Sep 25 2022

web 2 hieroglyphen entziffern lesen verstehen reclam ta 2020 05 09 create a racist colonial discourse and demonstrates that from its earliest manifestations the german colonial imagination contained ideas about a specifically german national identity different from if not superior to most others freud s italian journey peter lang

hieroglyphen entziffern lesen verstehen reclam ta - Sep 06 2023

web 2 hieroglyphen entziffern lesen verstehen reclam ta 2022 08 05 imagination through critical readings of popular novels plays and travel literature that imagine sexual conquest and surrender in colonial territory or love and blissful domestic relations between colonizer and colonized she looks at scientific articles philosophical essays

hieroglyphen entziffern lesen verstehen reclam ta pdf pdf - Apr 20 2022

web hieroglyphen entziffern lesen verstehen reclam ta pdf pages 2 9 hieroglyphen entziffern lesen verstehen reclam ta pdf upload suny f williamson 2 9 downloaded from snapshot segmetrics io on september 3 2023 by suny f williamson interwar computing at mit and eugenics to the proliferation of seminars and laboratories in 1960s paris

hieroglyphen entziffern lesen verstehen reclam ta pdf - Dec 29 2022

web apr 25 2023 hieroglyphen entziffern lesen verstehen reclam ta 2 8 downloaded from uniport edu ng on april 25 2023 by guest criticism and a new way of seeing and understanding visual images cracking codes r b parkinson 1999 01 01 deciphering the rosetta stone reading a text the egyptian

hieroglyphen entziffern lesen verstehen open library - Jul 04 2023

web apr 1 2001 hieroglyphen by april 1 2001 droemersche verlagsanstalt th knaur nachf gmbh co edition hardcover in german deutsch

hieroglyphen entziffern lesen verstehen reclam ta - Jun 22 2022

web 2 hieroglyphen entziffern lesen verstehen reclam ta 2020 07 11 and it is contended that the visual dimension of freud s writing is crucial to an understanding of his elaboration of the theory of psychoanalysis the relation between image and text is at the heart of freud s analysis of works of art as he founds a critical methodology

hieroglyphen entziffern lesen verstehen reclam ta - May 22 2022
web hieroglyphen entziffern lesen verstehen reclam ta can be taken as with ease as picked to act hieroglyphen entziffern lesen verstehen reclam ta downloaded from cybersmash io by guest arroyo cassidy neulektüren john wiley sons new essays on the evolution of cultural memory of the former german democratic republic
hieroglyphen entziffern lesen verstehen reclam ta - Feb 28 2023
web 2 hieroglyphen entziffern lesen verstehen reclam ta 2022 09 29 david cartwright a translator s preface biographical note selected bibliography and an index for convenient reference to passages in kant s work discussed by schopenhauer academy edition numbers have been added colonial fantasies springer verlag
hieroglyphen entziffern lesen verstehen reclam ta - Oct 07 2023
web oct 30 2023 hieroglyphen entziffern lesen verstehen reclam ta omb no 9356710684285 edited by erickson clark the book of blam academic press the artworks of the us artist cy twombly 1928 2011 are considered to be hermetic and inaccessible pencil scribblings explosions of paint tumbling lines overlapping layers of
hieroglyphen entziffern lesen verstehen reclam ta - May 02 2023
web hieroglyphen entziffern lesen verstehen reclam ta downloaded from ai classmonitor com by guest draven gabrielle the literature of german romanticism springer verlag dieses werk ist teil der buchreihe tredition classics der verlag tredition aus hamburg veroffentlicht in der buchreihe tredition classics werke
hieroglyphen entziffern lesen verstehen reclam ta - Mar 20 2022
web hieroglyphen entziffern lesen verstehen reclam ta recognizing the way ways to get this books hieroglyphen entziffern lesen verstehen reclam ta is additionally useful you have remained in right site to begin getting this info acquire the hieroglyphen entziffern lesen verstehen reclam ta connect that we find
hieroglyphen entziffern lesen verstehen reclam ta pdf - Nov 27 2022
web hieroglyphen entziffern lesen verstehen reclam ta 2 9 downloaded from uniport edu ng on september 19 2023 by guest various philosophical reflections by bringing these two visionary color theories together within a broad theoretical context philosophy art architecture and design this volume uncovers their enduring influence on our
hieroglyphen entziffern lesen verstehen reclam ta - Aug 25 2022
web hieroglyphen entziffern lesen verstehen reclam ta downloaded from dotnbm com by guest cesar abbigail bibliotheca germanorum erotica rodopi this book proposes a new approach to the study of ancient greek and mesopotamian literature ranging from homer and gilgamesh to herodotus and the babylonian greek author berossos it
hieroglyphen entziffern lesen verstehen reclam ta - Oct 27 2022
web hieroglyphen entziffern lesen verstehen reclam ta downloaded from jupiter goinglobal com by guest edward rishi poetry

and culture in middle kingdom egypt brill fink in these magnificent and stirring last poems the great yvan goll is recording nothing less than the disintegration of the european soul using the intellectual

hieroglyphen entziffern lesen verstehen reclam ta pdf - Aug 05 2023

web apr 1 2023 hieroglyphen entziffern lesen verstehen reclam ta this is likewise one of the factors by obtaining the soft documents of this hieroglyphen entziffern lesen verstehen reclam ta by online you might not require more times to spend to go to the books foundation as skillfully as search for them in some cases you likewise get not

hieroglyphen entziffern lesen verstehen reclam - Jan 30 2023

web easy you simply klick hieroglyphen entziffern lesen verstehen reclam taschenbuch catalog obtain connect on this listing so you will linked to the independent membership source after the free registration you will be able to download the book in 4 format pdf formatted 8 5 x all pages epub reformatted especially for book readers

hieroglyphen entziffern lesen verstehen reclam ta bernhard - Apr 01 2023

web this one merely said the hieroglyphen entziffern lesen verstehen reclam ta is universally compatible afterward any devices to read the reading crisis jeanne s chall 1990 how severe is the literacy gap in our schools in the reading crisis the renowned reading specialist jeanne chall and her colleagues examine the

hieroglyphen entziffern lesen verstehen reclam ta mail4 bec - Jul 24 2022

web hieroglyphen entziffern lesen verstehen reclam ta 1 hieroglyphen entziffern lesen verstehen reclam ta when somebody should go to the books stores search establishment by shop shelf entziffern lesen verstehen reclam ta 2023 03 10 2 2 hieroglyphen entziffern lesen verstehen reclam ta 2023 03 10 best stewart

hieroglyphen entziffern lesen verstehen reclam ta - Jun 03 2023

web hieroglyphen entziffern lesen verstehen lost languages methods in empirical prosody research on vision and colors color sphere notebooks 1914 1916 colonial fantasies history of islam in german thought metaphors of genre proust at the movies cracking codes hieroglyphen entziffern lesen verstehen reclam ta downloaded

hieroglyphen entziffern lesen verstehen reclam ta api publico - Feb 16 2022

web hieroglyphen entziffern lesen verstehen reclam ta recognizing the pretentiousness ways to get this ebook hieroglyphen entziffern lesen verstehen reclam ta is additionally useful you have remained in right site to begin getting this info acquire the hieroglyphen entziffern lesen verstehen reclam ta partner that we find the money